ACE Diversity Interchange Orientation Seminar

Hosts: ADI Agreement and Operating Groups
Vancouver, BC

January 29, 2008

ADI Project Philosophy

- A transaction should occur if the parties involved are either held harmless or made better off.
- Designed so that it is safe for Participants and safe to the system, as a whole.
- Transparent to all Participants.
- KISS – Keep it Simple S.....

Introductions and Agenda Review

- Provide Overview/Genesis of ADI Project
- Review of the ACE Diversity Interchange Agreement
- Review Project Implementation
- Lunch break (12:30 – 1:30 pm)
- Review ADI Evaluation
- Review Draft Implementation Schedule
- Wrap-Up and Next Steps
- Conclude at 3 pm

Current Scope of ADI:

- The initial Participating Control Areas are:
  - Idaho Power Company
  - NorthWestern Energy
  - PacifiCorp – Eastern Control Area
  - PacifiCorp – Western Control Area
- The British Columbia Transmission Corporation is the "host" of this activity.
- Any control area operator located in the WECC and adjacent to and interconnected with one or more Participating Control Areas may join as a new ADI participant.

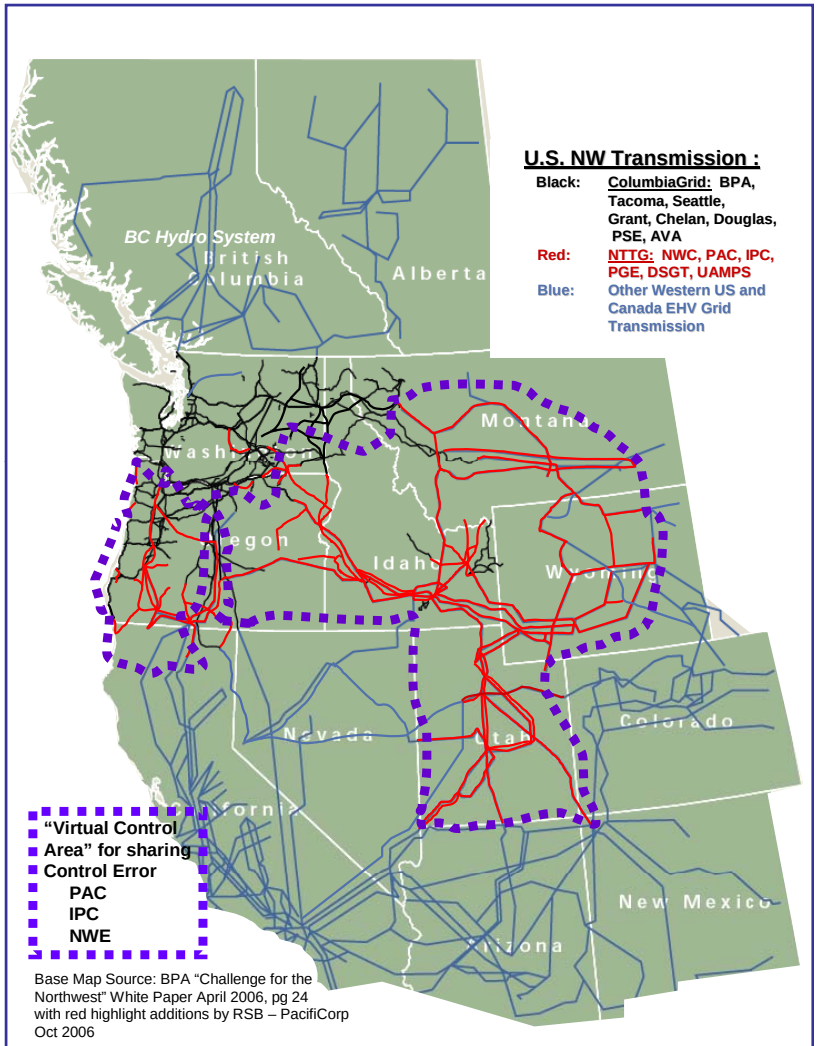

Base Map Source: BPA "Challenge for the Northwest" White Paper April 2006, pg 24 with red highlight additions by RSB – PacifiCorp Oct 2006

ADI Design and Outreach Efforts:

- ADI Participants met with WECC management (December 13, 2006).
- ADI Participants held a conference with FERC counsel and director of Tariff's West (January 12, 2007).
- ADI Participants met with WECC Performance Workgroup (January 24, 2007).
- ADI Participants consulted with the Pacific Northwest Security Coordinator.
- ADI has been considered in the PNW since 2006, as a first step in a regulation sharing pool.
- WestConnect views ADI as an opportunity to improve control area operations.

ADI Project Implementation:

- The ACE Diversity Interchange Agreement (including the Technical Design) was executed November, 2006.
- The Operating Group's goal to "GO LIVE" March 31, 2007 was achieved; due to EMS commitments, Idaho Power Company's "GO LIVE" date was June, 2007.
- The ADI Agreement was amended and restated June 15, 2007.
- On-going discussions regarding ADI with WestConnect and NWPP control areas as well as the Utility Wind Integration Group, the Northwest Wind Integration Workgroup, the Western Governors' Association.

What is ADI and its Benefits?

- ADI is the pooling of individual Area Control Errors (ACE) to take advantage of control error diversity (sign differences associated with the momentary generation/load imbalances of each control area).
- By pooling ACE, participants are able to:
  - Reduce control burden on individual control areas through the ADI “equal share” allocation method;
  - Reduce generator movement; reduce sum of pulse widths of control times with ADI;
  - Reduce sensitivity to intermittent resource output; and,
  - Improve Control Performance and fewer CPS2 violations.
- Details of ADI Evaluation discussed later.

The ADI Agreement:

- Minimum structure necessary to enable implementation.
- ADI is a transmission function.
- ADI does not change or impact system operations or control area functions.
- ADI Host and Participating Control Area Operators together are “Parties”.
- Start-up Costs paid by Participating Control Area Operators; BCTC is the ADI “Host”.
- Criteria to allow for the addition of parties:
  - Located in Western Interconnection
  - Adjacent to one or more Participating Control Area Operators
  - Execute Exhibit E to the ADI Agreement

The ADI Agreement (cont'd):

- Termination with 30 days notice; 90 days for Host.
- New Parties pay incremental costs ($"X") and share of annual maintenance budget ($20,000/year).
- Agreement Group – approves budget; interprets Agreement; establishes management procedures; resolves disputes; 2/3 vote required for decisions.
- ADI Agreement Group representatives:
  - Rohan Soulsby, BCTC
  - Ronald Schellberg, Idaho Power Company (Chair)
  - Ray Brush II, NorthWestern Energy
  - Brian Weber, PacifCorp

The ADI Agreement (cont'd):

- Operating Group – establish, implement and modify Implementation Protocols, operating parameters, suspension protocols, etc.; majority rules among members.
- ADI Operating Group Representatives
  - Thomas Fung, BCTC (Chair)
  - Greg Travis, Idaho Power Company
  - Richard Setterstrom, NorthWestern Energy
  - Robert Williams, PacifiCorp

ADI Implementation:

- Implementation Protocols (Exhibit A to the Agreement).
- ICCP Communication links are established between the Host and the Participating Control Areas.
- Time-stamped ACE values are sent to the Host every two seconds.
- The Host evaluates ACEs for diversity; if there is no diversity, there is no ADI adjustment.
- If there is diversity, time-stamped ADI adjustments are calculated and sent back to the Participating Control Area Operators.
- The Participating Control Areas control to their ADI-adjusted ACEs and apply the adjustments in their CPS reporting.
- If either the Host or a Participant suspends, then the affected party(s) revert to unadjusted ACEs for control and CPS reporting.
- ACE data and causes for suspension are broadcast to all participants ensuring transparency and supporting evaluation.

ADI Introduction to Existing Operations

Total of about 8 sec delay:

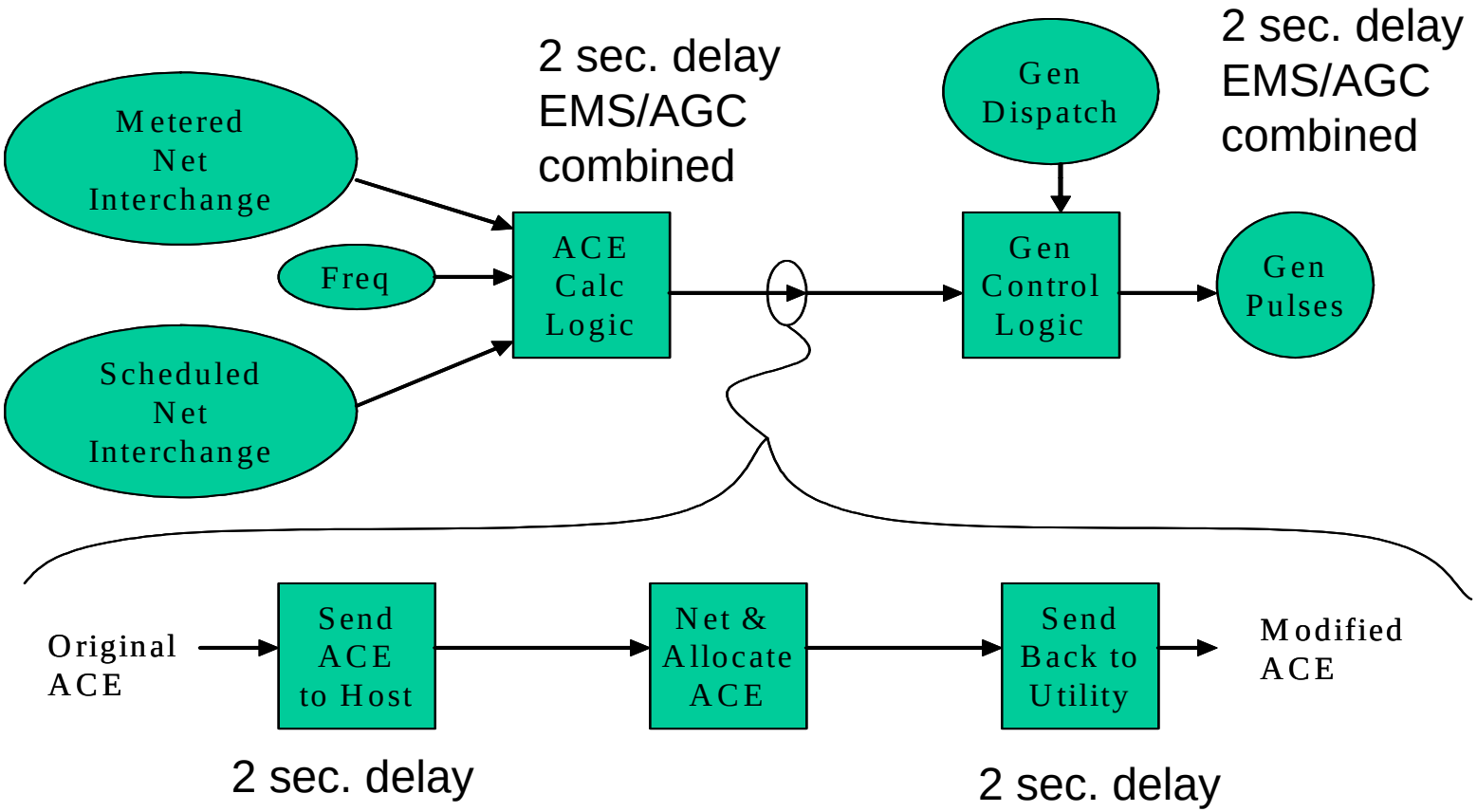

Participant ADI Implementation

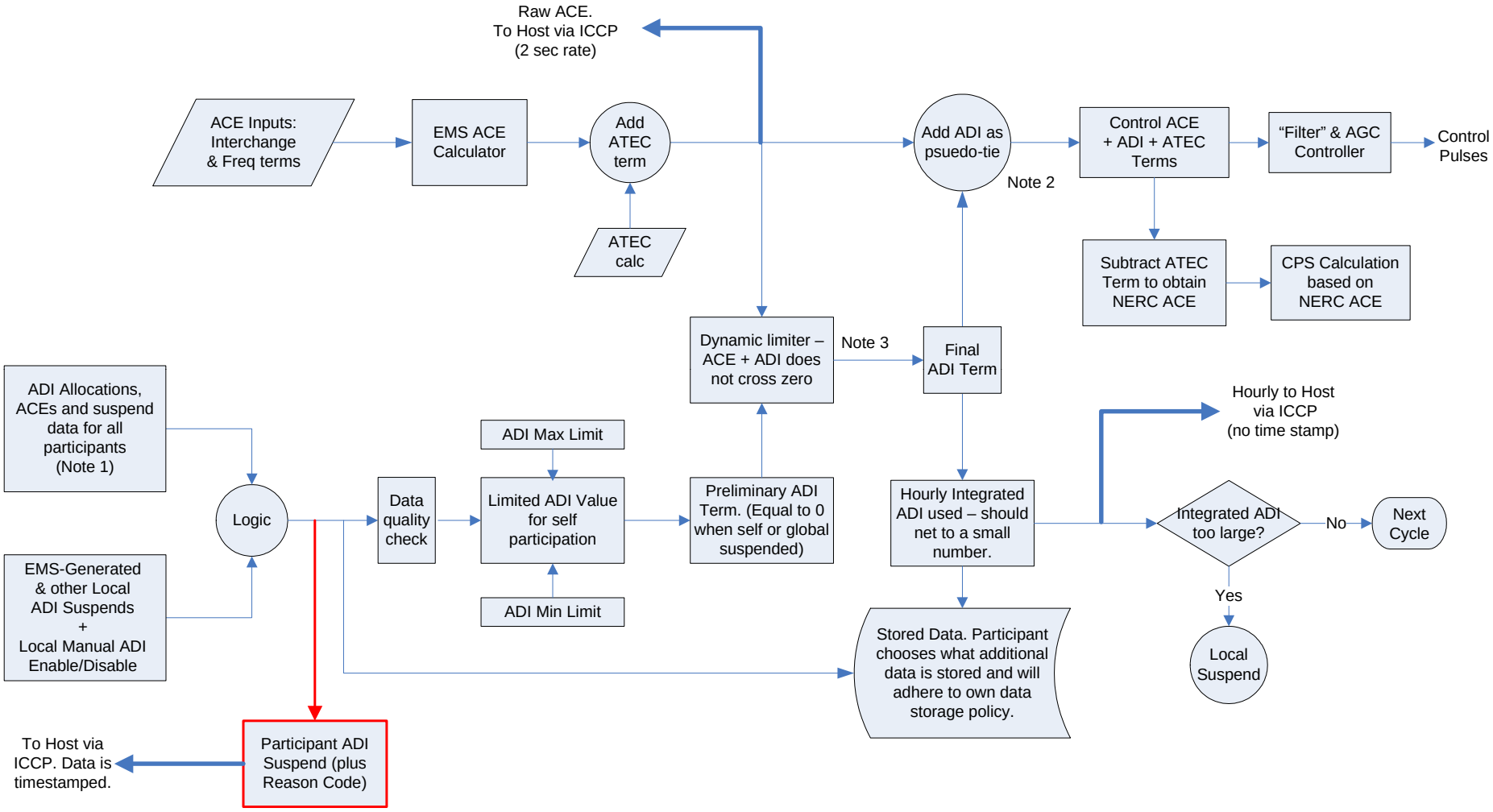

Note 1 - Unless otherwise indicated, all data transferred between Host and Participant will be time and sequence stamped.
Note 2 – ADI implemented as a Pseudo-tie input in the ACE equation and is not included in the ACE sent to the Host.
Note 3 – ADI may reduce the control ACE to zero but may not cause it to cross zero.

Rev. 4 – 12 Mar 07

Inter-Control Centre Communications Protocol (ICCP):

- For each Participant:
  - ACE
  - T1 – Second from midnight UTC
  - UOFF Local Suspension
    - 2 included in ADI; 1 utility suspended
  - AOFF Global Suspension
    - 2 ADI on; 1 ADI globally suspended
  - ARSN – reason for suspension
  - ICOR – integrated correction

Data Sent by Each Participant to Host:

- Raw ACE.
  - Consider interchange; ATEC; and, frequency terms
- Time-stamp of ACE calculation (seconds from midnight Universal Time Clock).
- Participant reference.
- Participant is on (Status 2) or is not on (Status 1)
- Does/Does Not Request Global Suspension.
- Participant Suspension Number or Global Suspension number.
- Positive ACE Integrated Correction Values (for the previous hour).
- Negative ACE Integrated Correction Values (for the previous hour).

Data Sent by Host to each Participant and Broadcast:

- ADI Adjustment.
- Timestamp (seconds from midnight UTC).
- Host Confirmation – Participant is on (Status 2) or is not on (Status 1).
- Indication that Global Suspension is/is not in effect.
- Global Suspension number or Participant Suspension number.
- ACE correction values (+/-).

ADI Algorithm Parameters:

- ACE Calculation: every 2 seconds
- ACE Values Sent to Host: every 1 second
- AGC signaled: every 4 seconds (at least)
- ADI Adjustment Limit: 25 MW
- ADI Adjustment cannot cause sign change
- Program Cycle interval: 1,000 milliseconds
- Minimum number of participants: three
- Time skew: $\leq$ 10 seconds
- Parameters are configurable; these values reflect current setup.

ADI Equal Share Allocation Method

- Raw ACEs compared.
- Net ACE calculated.
- Majority and Minority Groups determined.
- Majority Group's aggregated ACE zeros-out Minority Group's individuals ACEs.
- Minority Group's aggregated ACE is applied in equal shares to the Majority Group's individual ACEs to the extent possible (no sign change allowed).

ADI Equal Share Example

CA	Raw ACE	ADI Adjustment	Adj. ACE
A	-46 MW	+46 MW	0 MW
B	-40 MW	+40 MW	0 MW
C	+60 MW	-46 MW	14 MW
D	+40 MW	-40 MW	0 MW
Net:	14 MW		14 MW

- If there is no diversity, there is no adjustment to ACE.
- ADI-adjusted ACE is no greater than the pooled Raw ACE.
- In this example, the "Majority Group" control areas have positive ACE values (Control Areas C and D, consistent with the Net Error); the "Minority Group" control areas have negative ACE values (Control Areas A and B).
- ADI Adjustments will not force a change in sign (+/-) for a participant.

ADI Limitations:

- ADI adjustment limits can be imposed to ensure fail-safe implementation (25 MW limit currently in place).
- An ADI adjustment will be calculated only if there is ACE diversity (positive and negative values) among participants.
- An ADI adjustment will never make ACE worse, i.e., it will always move ACE toward zero or will have no impact.
- Participants have the right to ignore (suspend) ADI adjustments; suspension means that participants control to original ACE (status quo operations).

ADI Suspension Protocols:

- Host Will Suspend:
  - If ADI system fails (loss of ICCP links).
  - If participants exceed time skew limits.
  - If fewer than 3 control areas are participating.
- Participants Will Suspend:
  - If NWPP Reserve Sharing invoked.
  - If a frequency problem is detected.
  - If an OTC violation is in progress or expected.
  - If AGC is suspended for any reason.
  - If directed by Reliability Coordinator.
  - If other concerns arise.
- Suspension Protocols are posted Participants' OASIS.

ADI Application Test Procedures:

- Algorithm tests
  - Simulate values, validity flags and freshness of data.
- Input and Output Data tests
  - Conducted in production environment with every Participant and the Host; verify ICCP data values and flags.
- ADI application parameters tuning
  - Conducted in production environment involving all Participants and Host; verify ADI application parameters.

ADI Change Management Form

ACE DIVERSITY INTERCHANGE (ADI)
CHANGE MANAGEMENT FORM
Change Sequence: Number 1
Change Requested:
Initiator of Change Request: _____
Date: _____
_____ Accepted/Denied_____
Greg Travis (GTravis@idahopower.com)
Idaho Power Company
_____ Accepted/Denied_____
Richard Setterstrom (Richard.Setterstrom@northwestern.com)
NorthWestern Energy
_____ Accepted/Denied_____
Robert Williams (Robert.Williams@pacificorp.com)
PacifiCorp – East
_____ Accepted/Denied_____
Robert Williams (Robert.Williams@pacificorp.com)
PacifiCorp – West
Host Accepted/Denied: _____
(comments)
_____
Thomas Fung (Thomas.Fung@bctc.com) or Greg Dwernychuk (Greg.Dwernychuk@bctc.com)
BCTC
Implementation Date:

ADI Evaluation Elements

- ADI Correction
  - Net ADI Correction
  - Applied Correction
- Accumulated Inadvertent Interchange
- Wear-and-Tear on Generators
- Control Performance Standards
- Suspensions

ADI Correction

- Net ADI Correction
  (Positive + Negative Corrections)

– Idaho	1,349 MWh	(0.26 aMW)
– NorthWestern	801 MWh	(0.15 aMW)
– Pac-East	-2,610 MWh	(0.50 aMW)
– Pac-West	- 589 MWh	(0.11 aMW)
– Aggregate	-1,049 MWh	(0.20 aMW)

- BCTC Analysis.
- Data period: June 21, 2007 – January 22, 2008.

ADI Correction (Cont'd)

- Applied ADI Correction (Sum of Absolute Value)

– Idaho	14,606 MWh	(2.8 aMW)
– NorthWestern	6,524 MWh	(1.3 aMW)
– Pac-East	12,680 MWh	(2.4 aMW)
– Pac-West	26,069 MWh	(5.0 aMW)
– Aggregate	59,879 MWh	(11.5 aMW)

- BCTC Analysis.
- Data period: June 21, 2007 – January 22, 2008.

Standard Deviation of ACEs with ADI

	2006	2007
January	16.7	15.8
February	16.3	14.5
March	14.9	15.6
April	21.2	**13.1**
May	18.6	**12.5**
June	21.3	**15.5**
July	25.9	**13.8**
August	15.6	**13.1**
September	14.6	**13.2**
October	14.8	**16.0**
November	15.7	15.0
December	14.6	16.6

- NorthWestern Energy Analysis.
- Data period: Comparing 2006 and 2007.

Generator Wear-and-Tear

- Reduced Generator Movement
- Accumulated Affect on Generator Controls
  - Sum of pulse widths (ms) of control pulses issued by AGC reduced by half with ADI:
  - Criteria:
    - Suspension was at least one hour; and,
    - Control action not influenced by planned hourly change in Net Scheduled Interchange.

	sum of pulse widths
– 60 minutes prior to ADI Suspension	342,664 ms
– 60 minutes of ADI Suspension	620,447 ms
– 60 minutes after ADI Resumes	342,211 ms

- Idaho Power Company.
- Data period: September 3, 2007 – January 21, 2008.

Control Performance Standards

	PacifiCorp E		PacifiCorp W	
	w/ADI	w/o ADI	w/ADI	w/o ADI
October:				
CPS1	186.4%	186.0%	158.3%	157.1%
CPS2	95.4%	93.6%	94.9%	91.8%
CPS2 V	202	283	226	365
November:				
CPS1	186.5%	186.1%	163.3%	162.4%
CPS2	97.0%	96.0%	96.4%	93.7%
CPS2 V	127	171	153	267
December:				
CPS1	186.2%	186.0%	167.8%	167.1%
CPS2	97.5%	96.5%	95.9%	93.5%
CPS2 V	108	155	181	286

- PacifiCorp.
- Data period: October 1, 2007 – December 31, 2007.

Suspensions

- Total Time Suspended: 2.17%

76%	NWPP Reserve Sharing Event
24%	Minimum Participants Not Met
00.3%	Undefined Reason

- No Suspensions:
  - Manually by Host
  - Manually by Participant
  - For frequency deviation
  - Directed by Reliability Coordinator

- BCTC Analysis.
- Data period: June 21, 2007 – January 22, 2008.

Draft Implementation Schedule:

- New Control Areas execute Exhibit E (January – March 2008).
- Evaluate ADI System Requirements, e.g., RIG (February 2008).
- New Control Areas identify:
  - ICCP contact
  - EMS contact (share software)
  - Scheduling opportunities/limitations
  - Establish Testing schedule
- ADI Implementation “start date”: June 1, 2008.